Kit de refacciones para mantenimiento preventivo. */ Kit of parts for preventive maintenance.*

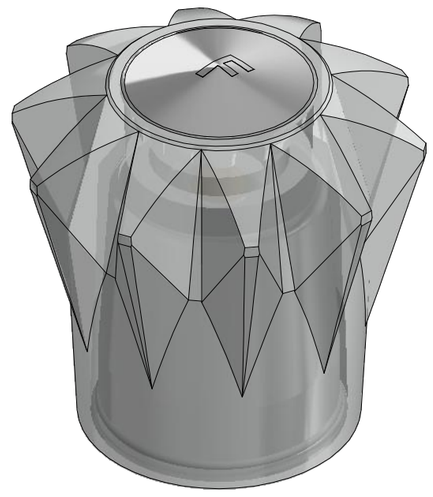

Rh-050
Tapon "F" Maneral Flair Grande
Big Handle Cap "F"

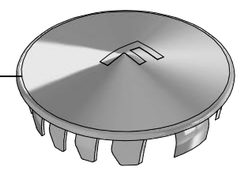

Rh-027
Tornillo Phillips 8-32-UNC-2A x 1 ¼"
8-32-UNC-2A x 1 ¼" Phillips Screw

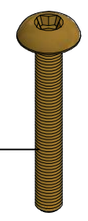

Rh-049
Tapón "C" Maneral Flair Grande
Big Handle Cap "C"

Rh-026
Rondana Man. Grande
Big Handle Washer

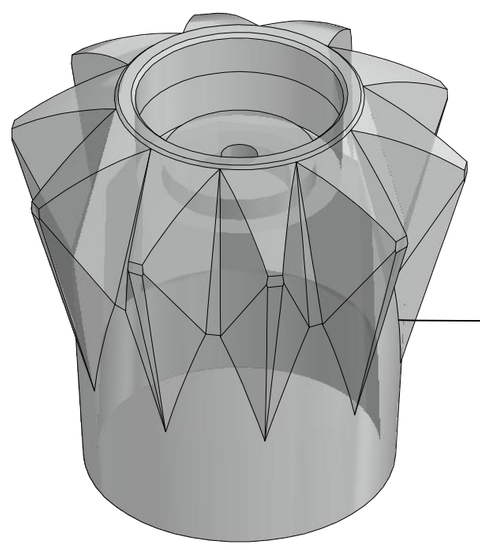

Rh-051
Maneral Flair Transparente Grande
Big Handle Transparent

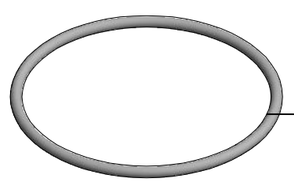

Rh-427
O´ring 2-029

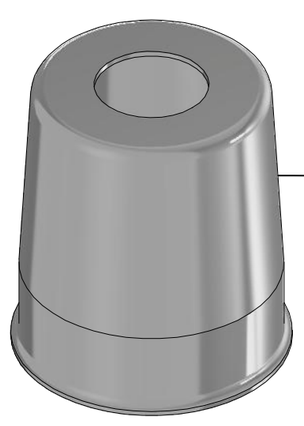

Rh-052
Base Maneral Flair Grande
Big Handle Base

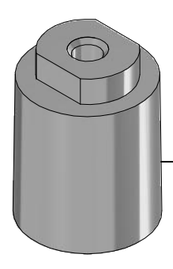

Rh-799
Porta-Base Maneral Flair Grande
Big Handle Base Holder

Asesoría y Servicio Técnico:
Consultancy and Technical Service:
(52) 55 53 33 94 31
servicio.tecnico@helvex.com.mx

Refacciones Originales:
Original Spare Parts:
www.refaccioneshelvex.com.mx
refacciones@helvex.com.mx
(52) 55 53 33 94 00
(52) 55 53 33 94 21
Ext. 5913, 5068 y 4815