Kúbica®

C-69

Juego de Manerales Grandes

Kit of Big Handles

Kit de refacciones para mantenimiento preventivo. */ Kit of parts for preventive maintenance.*

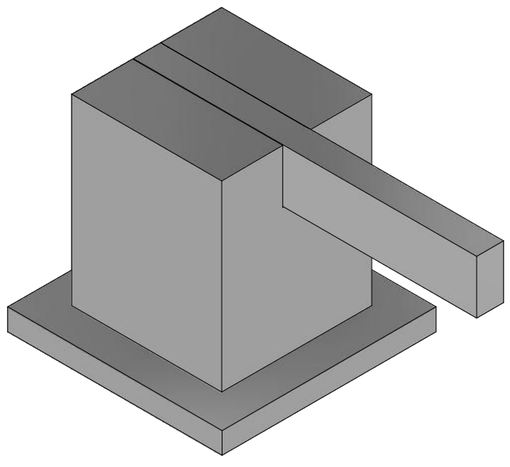

Rr-107
Opresor 8-32 UNC x ¼"
8-32 UNC x ¼" Setscrew

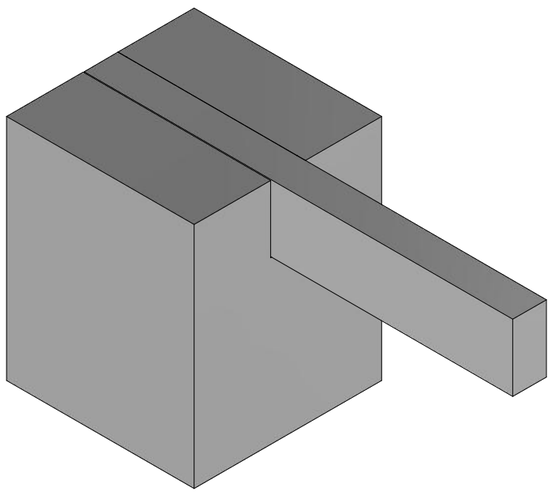

Rf-015
Torn. Cab. Red. 8-32-UNC-2A
Round Head Screw 8-32-UNC-2A

Rh-1464
Contratuerca Maneral
Locknut Handle

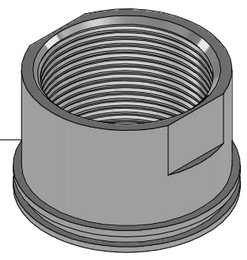

Sh-1779
O´ring 2-027

Rh-1463
Chapetón Maneral
Escutcheon Handle

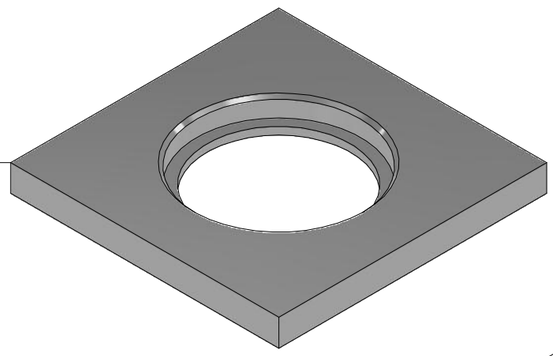

Rh-1778
Empaque Maneral
Gasket Handle

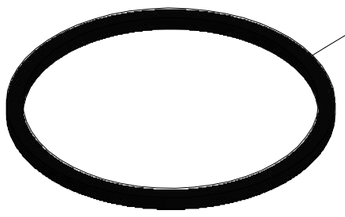

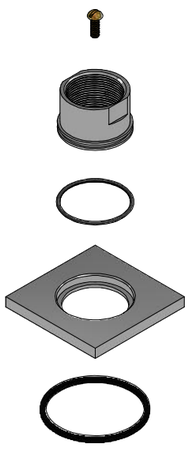

Sh-1085
Chapetón Armado p/ Maneral
Assembly Escutcheon for Handle

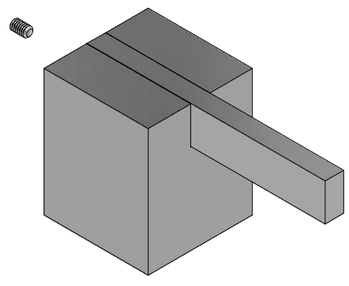

Sh-1097
Maneral Armado
Assembly Handle

Asesoría y Servicio Técnico:
Consultancy and Technical Service:
(52) 55 53 33 94 31
servicio.tecnico@helvex.com.mx

Refacciones Originales:
Original Spare Parts:
www.refaccioneshelvex.com.mx
refacciones@helvex.com.mx
(52) 55 53 33 94 00
(52) 55 53 33 94 21
Ext. 5913, 5068 y 4815